In-line Duct Fan

Φ 150

Aluminum Die-casting
Carbon Steel
IP44
F

Maintenance Free Ball Bearing

Dimensional Drawings

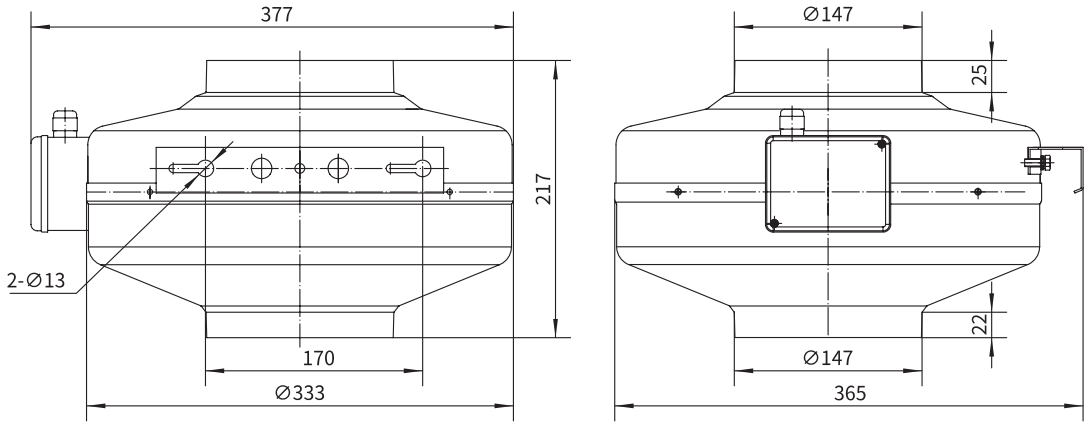

Performance Curves

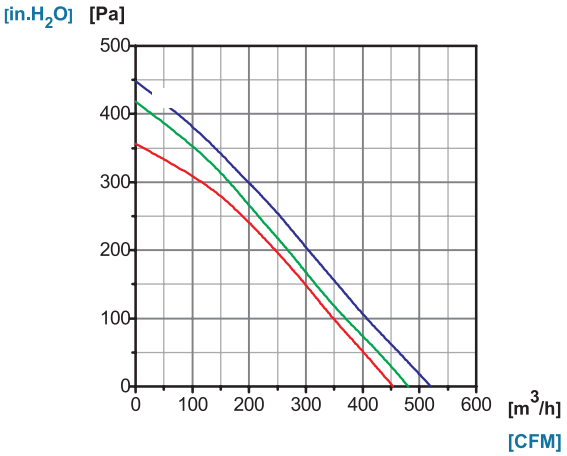

	V	Hz	A	W							
YWF.G2S-150-217AA2A	110/120	60	0.91	108	2520	10	520/305	67		-30/+60	
YWF.G2S-150-217AA20	220/230	50	0.37	80	2395	3	450/260	68		-30/+60	CCC, CE
	220/230	60	0.50	108	2425	3	480/282	70		-30/+60	CE